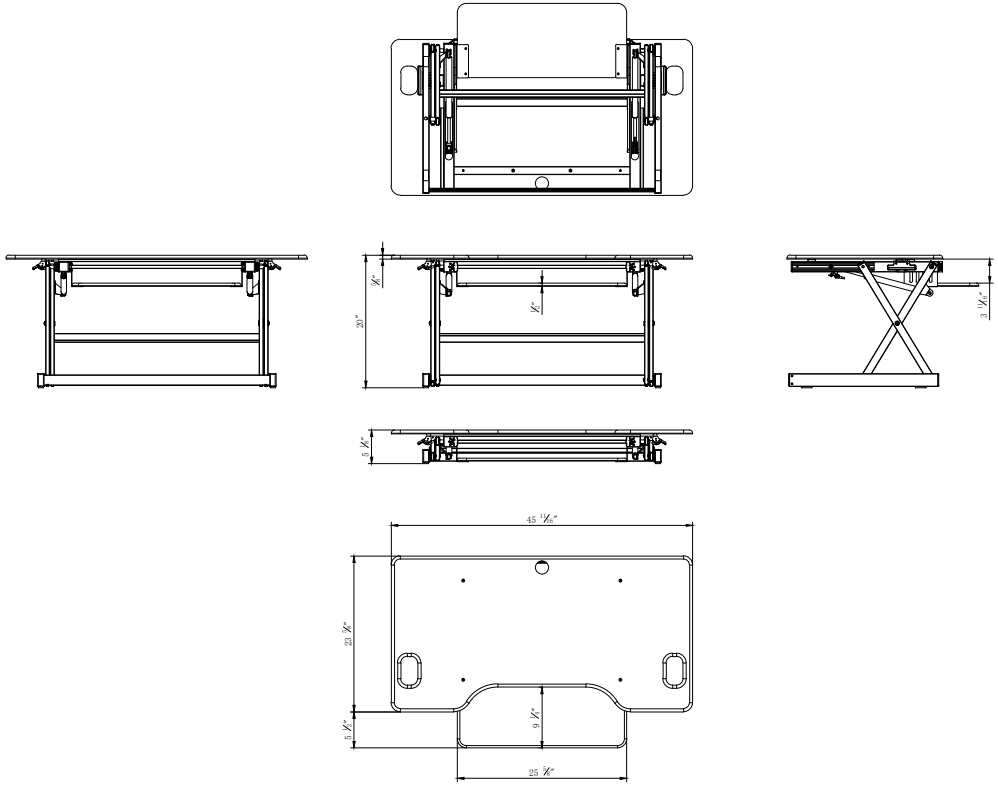

20"
3 11/16"
5 1/4"
45 11/16"
23 3/4"
9 1/4"
5 1/2"
25 5/8"