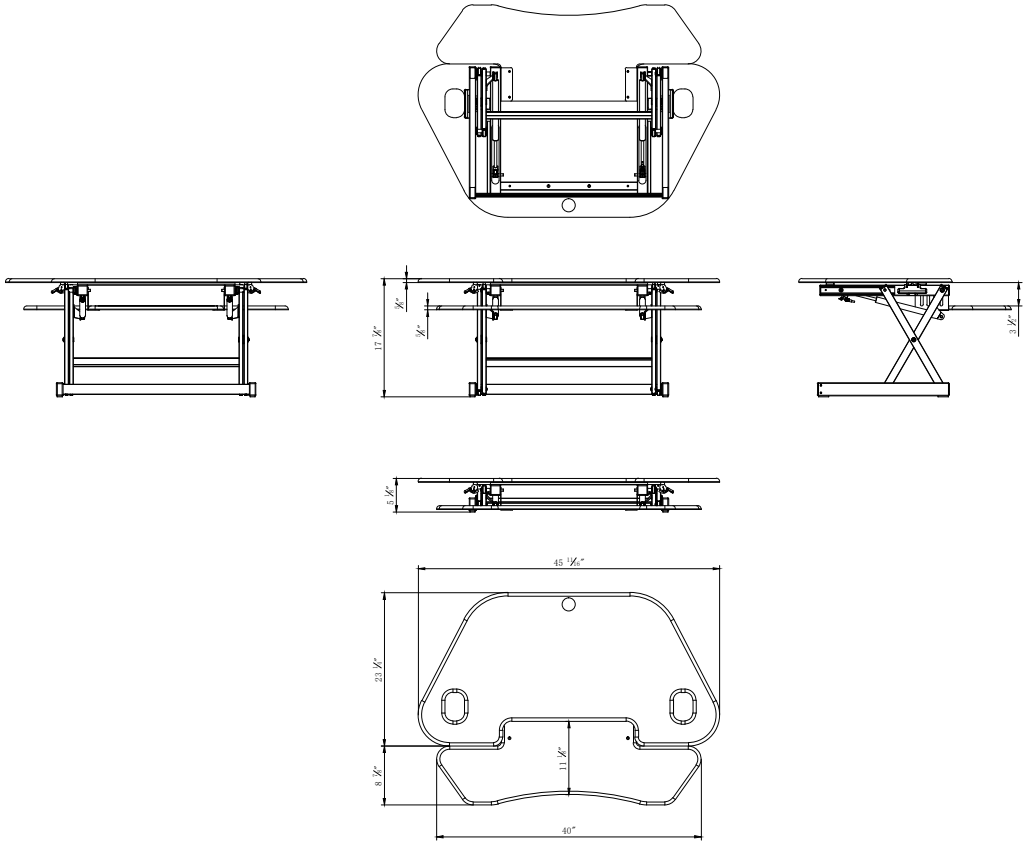

17 7/8"
5/8"
5/8"
3 1/2"
5 1/8"
45 11/16"
23 1/8"
8 7/8"
11 1/8"
40"